

Ultra 250

Ceiling exhaust fans

- Sound pressure level LpA at 3 m: 36
- Backdraft protection: Backdraft damper

	Unit of measurement	Ultra 250
Minimum supply voltage	V	220
Maximum supply voltage	V	240
Power supply frequency	Hz	50
Rated power	W	57
Unit current	A	0.25
Maximum airflow	m³/h	482
Rotation speed at 50hz	-	1085
Sound pressure level LpA at 3 m	dB(A)	36
Weight	kg	4.13
Ambient air temperature min	°C	1
Ambient air temperature max	°C	40
Ingress protection rating	-	IPX4

Dimensions

a	b	c	Ød
198	38	330	148

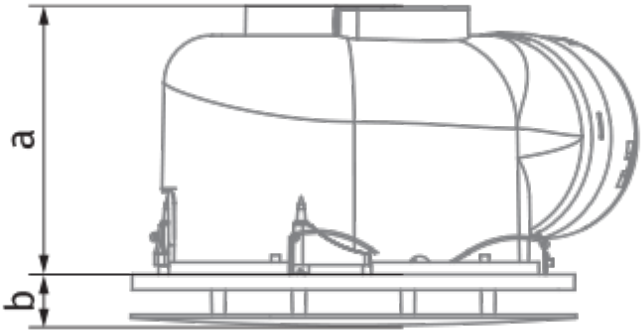

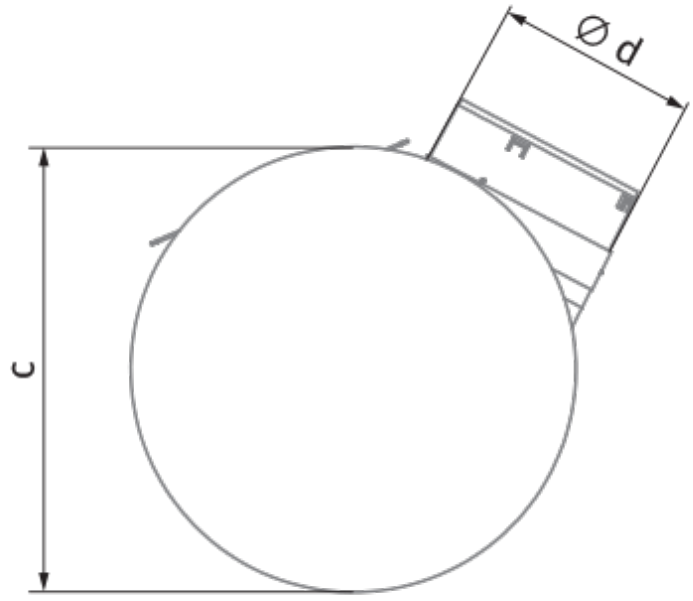

Ultra 250 Round

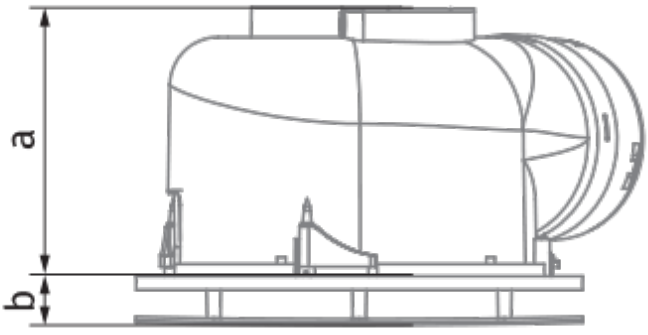

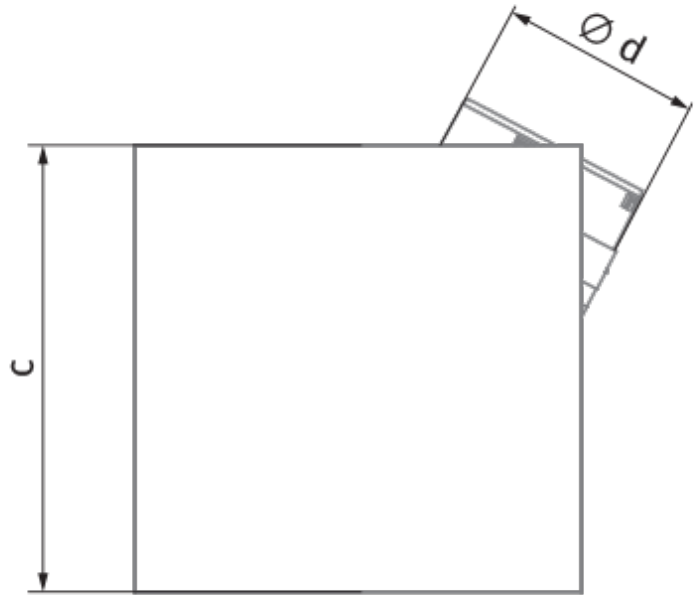

Ultra 250 Square