

Turbo 200 G

Mixed-flow inline fans

- Sound pressure level LpA at 3 m: 45
- Control: Speed controller
- Impeller type: Mixed-flow
- Casing material: Plastic
- Installation in any position
- Cable with mains plug
- Temperature sensor

	Unit of measurement	Turbo 200 G	
Speed	-	1	2
Connected air duct size	mm	200	
Phases	-	1	
Minimum supply voltage	V	230	
Maximum supply voltage	V	230	
Power supply frequency	Hz	50/60	
Rated power	W	76	108
Unit current	A	0.34	0.48
Maximum airflow	m³/h	830	1040
Sound pressure level LpA at 3 m	dB(A)	39	45
Weight	kg	3.95	
Transported air temperature (max)	°C	60	
Ingress protection rating	-	IPX4	
Ingress protection rating of the drive	-	IPX4	
Impeller material	-	Plastic	

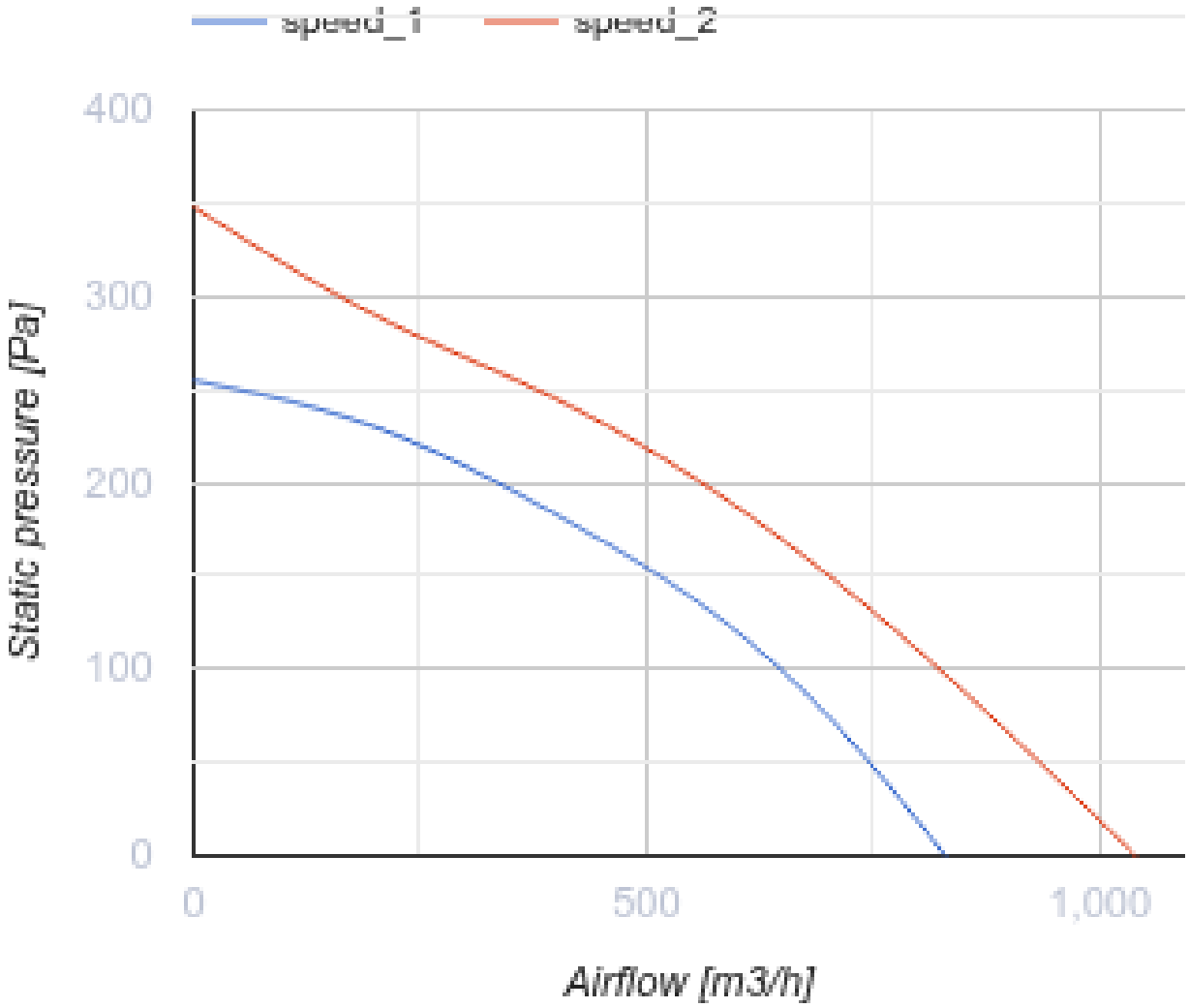
speed_1
speed_2
400
300
200
100
0
Static pressure [Pa]
0
500
1,000
Airflow [m3/h]

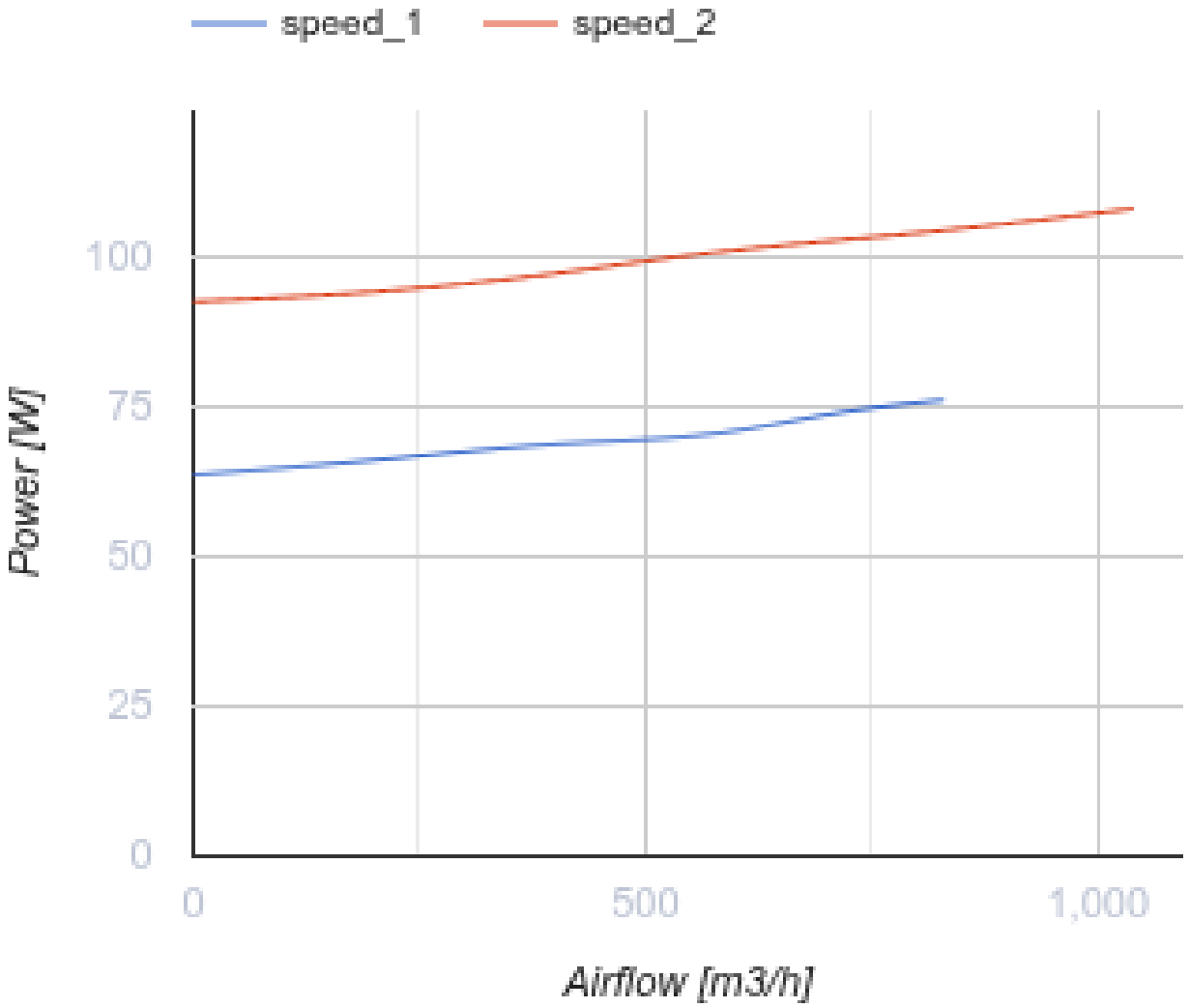

Dimensions

ØD	ØD1	B	H	L
199	209	239	261	295.5

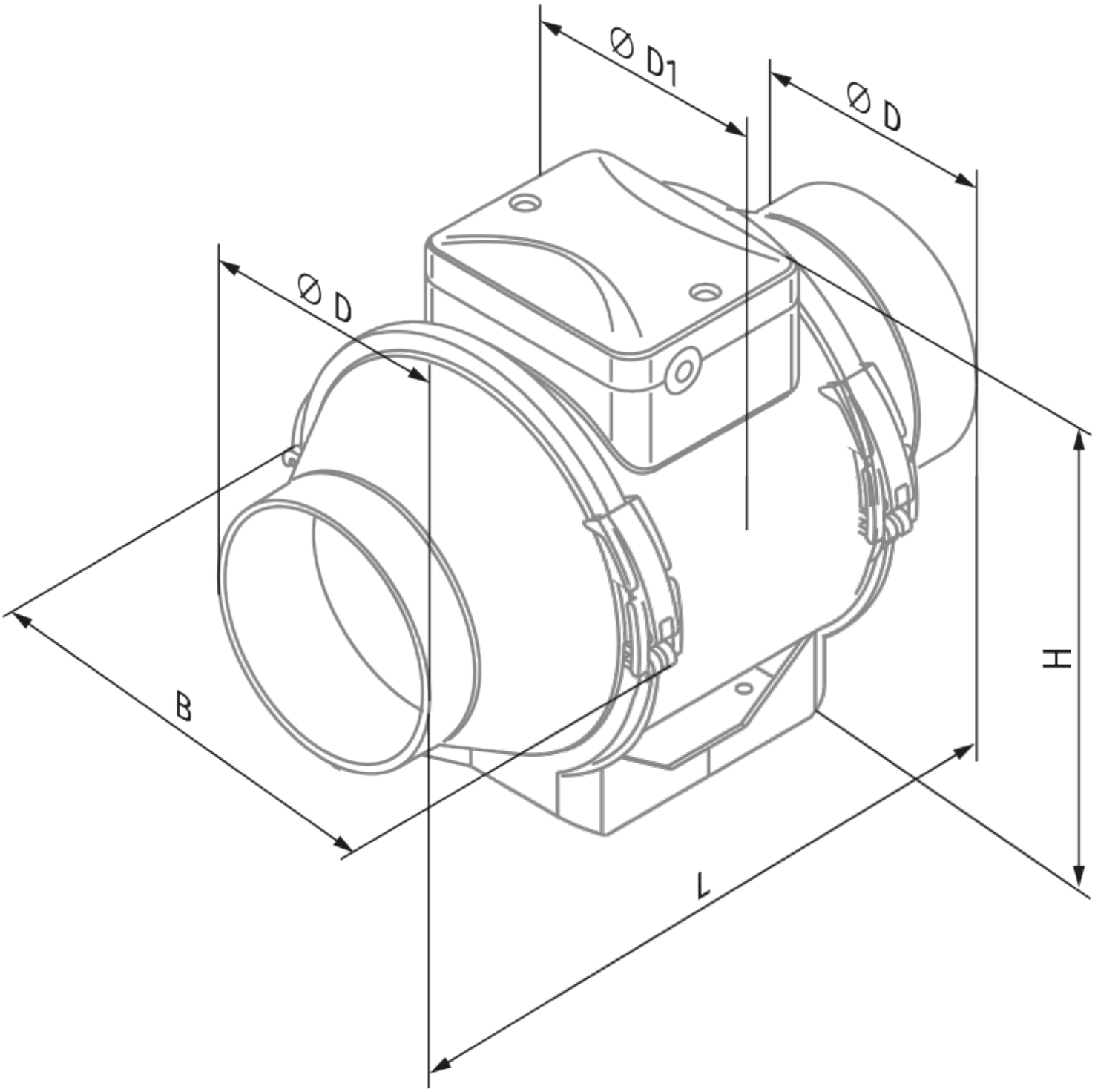
Ø D1
Ø D
Ø D
B
H
L

Ecodesign

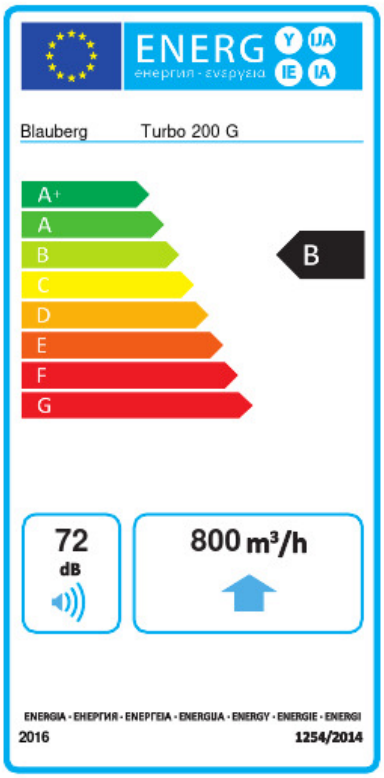

Trademark	Blauberg					
Model	Turbo 200 G					
Specific energy consumption (SEC) (kWh/(m²/a))	Cold		Average		Warm	
	-53.6	A+	-26.5	B	-11	E
Type of ventilation unit	Unidirectional					
Type of drive installed	Variable speed					
Type of heat recovery system	None					
Maximum flow rate (m³/h)	800					
Electric power input (W)	108					
Reference flow rate (m³/s)	0.156					
Reference pressure difference (Pa)	50					
Specific power input (SPI) (W/(m³/h))	0.136					
Control typology	Local demand control					
Maximum external leakage rates (%)	2.7					
Declared typology	RVU UVU					
Sound power level (dB(A))	72					
The annual electricity consumption (AEC) (kWh/a)	Cold		Average		Warm	
	72		72		72	
The annual heating saved (AHS) (kWh/a)	Cold		Average		Warm	
	5536		2830		1280	