

KOMFORT ERV EC DB250 S14

Suspended heat and energy recovery air handling units

- Sound pressure level LpA at 3 m: 36
- Heat exchanger type: Cross flow
- Heat exchanger material: Enthalpy
- Supply filter: G4 + F8 (PM2.5 > 83 %)
- Extract filter: G4
- Sound-insulated casing
- Enthalpy heat exchanger
- Bypass: Manual
- Control: Wired control panel
- Casing material: Coated steel
- Humidity sensor: Optional
- CO2 sensor: Optional

	Unit of measurement	KOMFORT ERV EC DB250 S14
Connected air duct size	mm	150
Phases	-	1
Maximum supply voltage	V	230
Minimum supply voltage	V	230
Power supply frequency	Hz	50/60
Rated power	W	84
Unit current	A	0.7
Maximum airflow	m³/h	300
Sound pressure level LpA at 3 m	dB(A)	36
Heat recovery efficiency, max	%	73
Heat exchanger type	-	Cross flow
Heat exchanger material	-	Enthalpy
Weight	kg	29
Supply filter	-	G4 + F8 (PM2.5 > 83 %)
Extract filter	-	G4
Transported air temperature (max)	°C	40
Transported air temperature (min)	°C	-15
Ambient air temperature min	°C	1
Ambient air temperature max	°C	40
Ingress protection rating	-	IP22
Ambient air humidity max	%	60

Ingress protection rating of the drive	-	IP44

Dimensions

D	B	H	L	L1
149	704	227	947	854

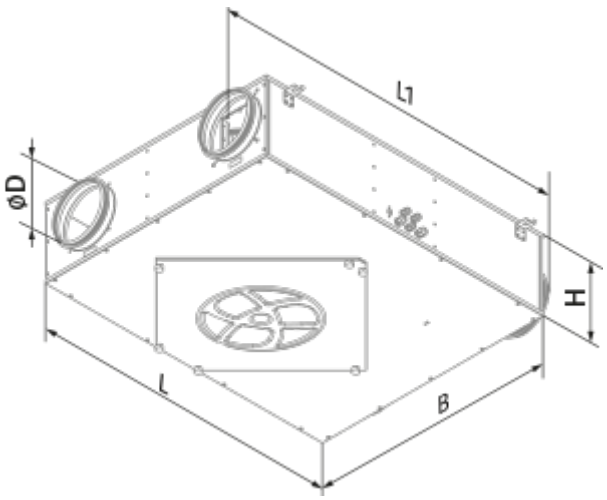

Ecodesign

Trademark	Blauberg					
Model	KOMFORT ERV EC DB250 S14					
Specific energy consumption (SEC) (kWh/(m²/a))	Cold		Average		Warm	
	0	A+	0	A	0	E
Type of ventilation unit	Bidirectional					
Type of drive installed	Variable speed					
Type of heat recovery system	Recuperative					
Thermal efficiency of heat recovery (%)	0					
Maximum flow rate (m³/h)	0					
Electric power input (W)	0					
Reference flow rate (m³/s)	0					
Reference pressure difference (Pa)	0					
Specific power input (SPI) (W/(m³/h))	0					
Control typology	Local demand control					
Maximum internal leakage rates (%)	0					
Maximum external leakage rates (%)	0					
Declared typology	RVU BVU					
Sound power level (dB(A))	0					
The annual electricity consumption (AEC) (kWh/a)	Cold		Average		Warm	
	0		0		0	
The annual heating saved (AHS) (kWh/a)	Cold		Average		Warm	
	0		0		0	