

Iso-Mix 250

Mixed-flow inline fans in sound-insulated casings

- Sound pressure level LpA at 3 m: 38
- Sound-insulated casing
- Control: Speed switch
- Impeller type: Mixed-flow
- Casing material: Coated steel
- Installation in any position

	Unit of measurement	Iso-Mix 250	
Speed	-	1	2
Connected air duct size	mm	250	
Phases	-	1	
Minimum supply voltage	V	230	
Maximum supply voltage	V	230	
Power supply frequency	Hz	50/60	
Rated power	W	125	177
Unit current	A	0.54	0.79
Maximum airflow	m³/h	1110	1400
Rotation speed at 50hz	-	1955	2440
Sound pressure level LpA at 3 m	dB(A)	34	38
Weight	kg	15	
Transported air temperature (max)	°C	60	
Ingress protection rating	-	IPX4	
Ingress protection rating of the drive	-	IPX4	
Impeller material	-	Plastic	

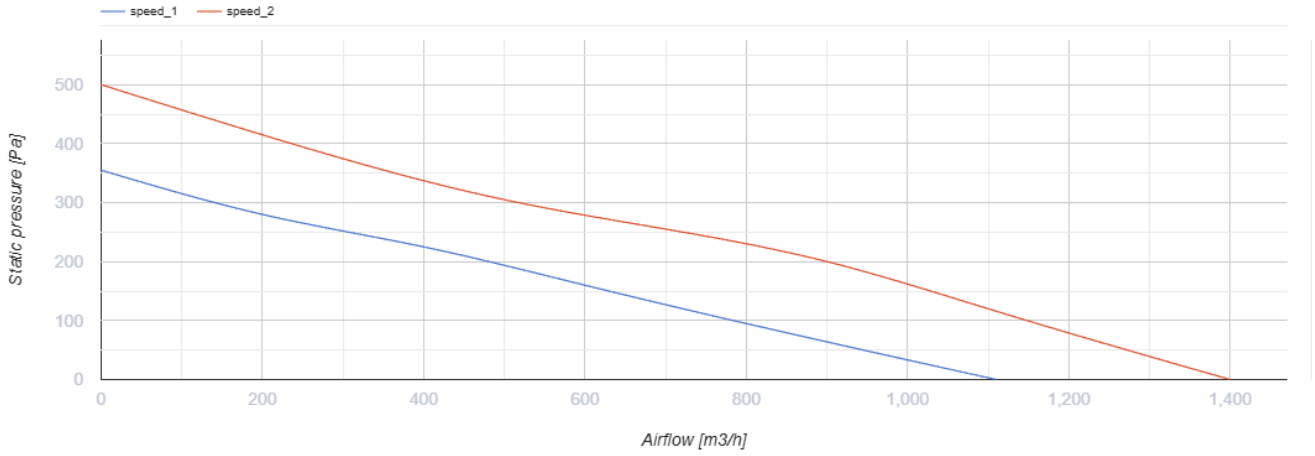

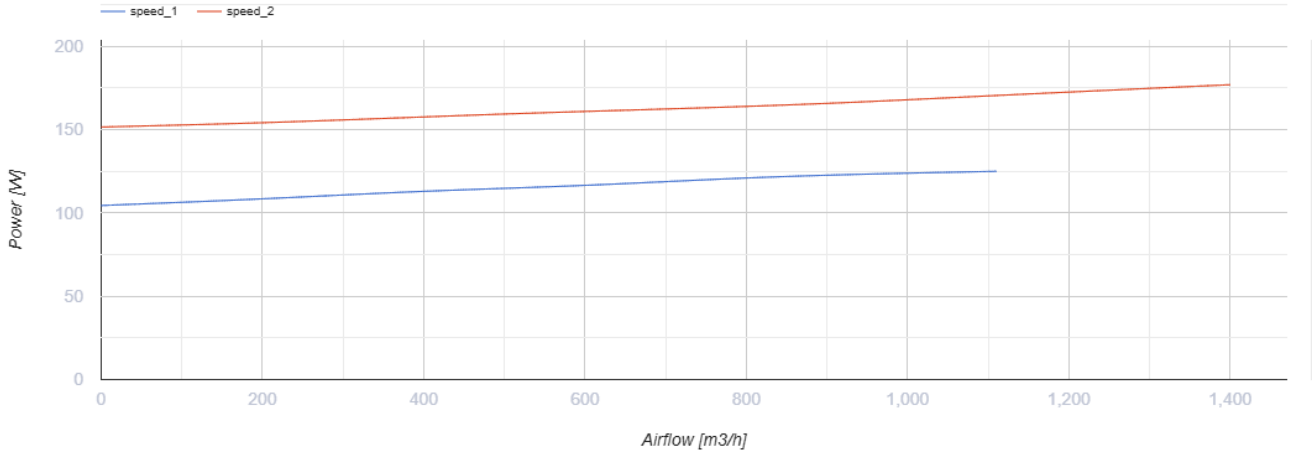

Dimensions

ØD	B	B1	L	H
248	358	445	658	360

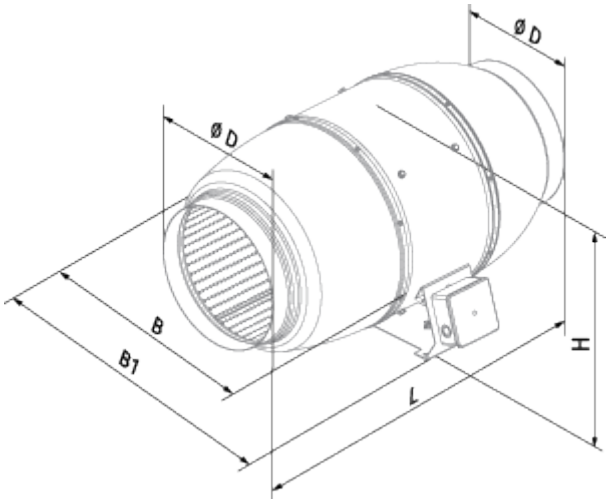

Ecodesign

Trademark	Blauberg
Model	Iso-Mix 250
Type of drive installed	External MSD or VSD
Type of heat recovery system	None
Nominal external pressure (Pa)	236
Maximum external leakage rates (%)	2.7
Static efficiency (%)	30.9
Sound power level (dB(A))	56
Effective electric power input (kW)	0.174
Declared typology	NRVU UVU