

Iso-Mix 200

Mixed-flow inline fans in sound-insulated casings

- Sound pressure level LpA at 3 m: 36
- Sound-insulated casing
- Control: Speed switch
- Impeller type: Mixed-flow
- Casing material: Coated steel
- Installation in any position

	Unit of measurement	Iso-Mix 200		
Speed	-	1	2	3
Connected air duct size	mm	200		
Phases	-	1		
Minimum supply voltage	V	230		
Maximum supply voltage	V	230		
Power supply frequency	Hz	50/60		
Rated power	W	81	98	110
Unit current	A	0.36	0.43	0.49
Maximum airflow	m³/h	779	985	1130
Rotation speed at 50hz	-	2413	2709	2837
Sound pressure level LpA at 3 m	dB(A)	30	34	36
Weight	kg	7.9		
Transported air temperature (max)	°C	60		
Ingress protection rating	-	IPX4		
Ingress protection rating of the drive	-	IPX4		
Impeller material	-	Plastic		

Dimensions

ØD	B	B1	L	H
198	293	386	550	295

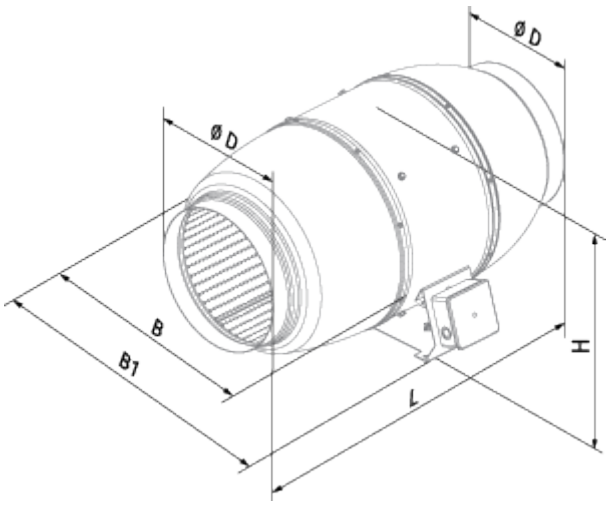

Ecodesign

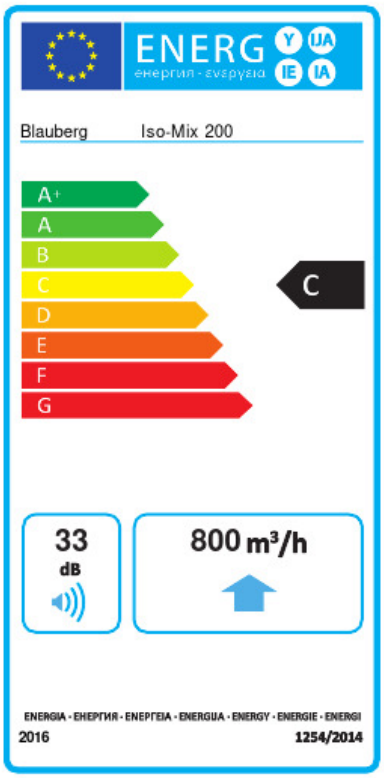

Trademark	Blauberg					
Model	Iso-Mix 200					
Specific energy consumption (SEC) (kWh/(m²/a))	Cold		Average		Warm	
	-52.8	A+	-25.7	C	-10.2	E
Type of ventilation unit	Unidirectional					
Type of drive installed	Multi-speed					
Type of heat recovery system	None					
Maximum flow rate (m³/h)	800					
Electric power input (W)	110					
Reference flow rate (m³/s)	0.156					
Reference pressure difference (Pa)	50					
Specific power input (SPI) (W/(m³/h))	0.139					
Control typology	Local demand control					
Maximum external leakage rates (%)	2.7					
Declared typology	RVU UVU					
Sound power level (dB(A))	33					
The annual electricity consumption (AEC) (kWh/a)	Cold		Average		Warm	
	104		104		104	
The annual heating saved (AHS) (kWh/a)	Cold		Average		Warm	
	5536		2830		1280	