

# Ducto 125

Low-noise axial inline fans for exhaust or supply ventilation

- Sound pressure level LpA at 3 m: 32
- Casing material: Plastic
- Backdraft protection: Backdraft damper
- Cable with mains plug

| | Unit of measurement | Ducto 125 |
|---|---|---|
| Connected air duct size | mm | 125 |
| Phases | - | 1 |
| Minimum supply voltage | V | 220 |
| Maximum supply voltage | V | 240 |
| Power supply frequency | Hz | 50 |
| Rated power | W | 13 |
| Unit current | A | 0.085 |
| Maximum airflow | $m^3/h$ | 197 |
| Sound pressure level LpA at 3 m | dB(A) | 32 |
| Weight | kg | 0.75 |
| Ambient air temperature max | °C | 40 |
| Ambient air temperature min | °C | 1 |
| Ingress protection rating | - | IPX4 |
| Impeller material | - | Plastic |

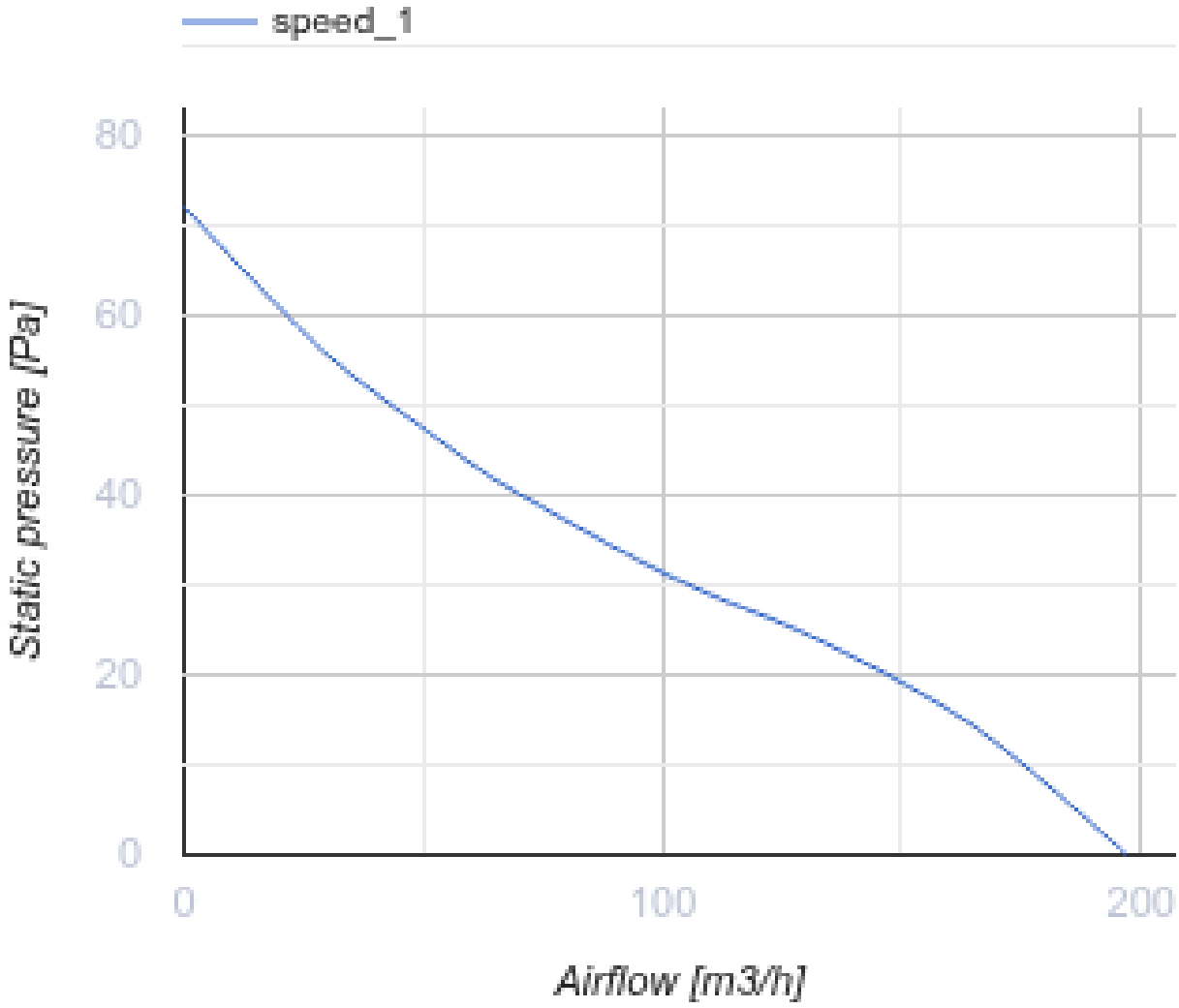


## Dimensions

| L | ØD | K |
|---|---|---|
| 161.5 | 125 | 53.5 |

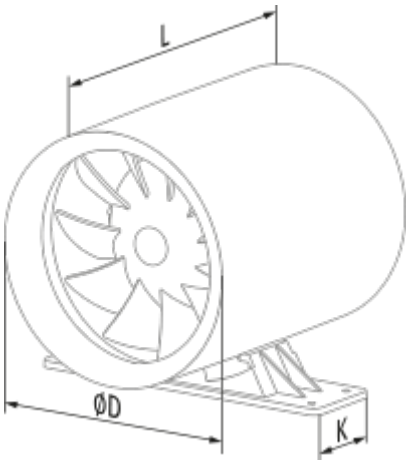
L
ØD
K