

Centro EC 250

Centrifugal inline fans in plastic casings with EC-motors

- Sound pressure level LpA at 3 m: 48
- Impeller type: Centrifugal impeller with backward curved blades
- Casing material: Plastic
- Installation in any position

	Unit of measurement	Centro EC 250
Connected air duct size	mm	250
Phases	-	1
Minimum supply voltage	V	230
Maximum supply voltage	V	230
Power supply frequency	Hz	50/60
Rated power	W	165
Unit current	A	1.1
Maximum airflow	m³/h	1250
Rotation speed at 50hz	-	2600
Sound pressure level LpA at 3 m	dB(A)	48
Weight	kg	4.3
Transported air temperature (max)	°C	60
Transported air temperature (min)	°C	-25
Ingress protection rating	-	IPX4
Ingress protection rating of the drive	-	IP55
Impeller material	-	Plastic

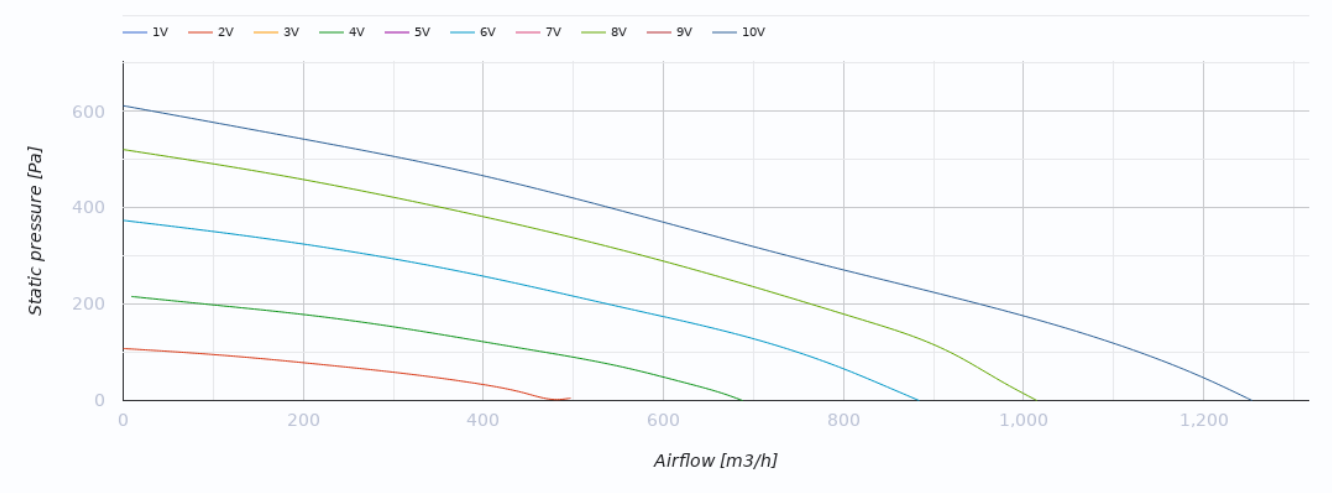
1V
2V
3V
4V
5V
6V
7V
8V
9V
10V
Static pressure [Pa]
600
400
200
0
0
200
400
600
800
1,000
1,200
Airflow [m3/h]

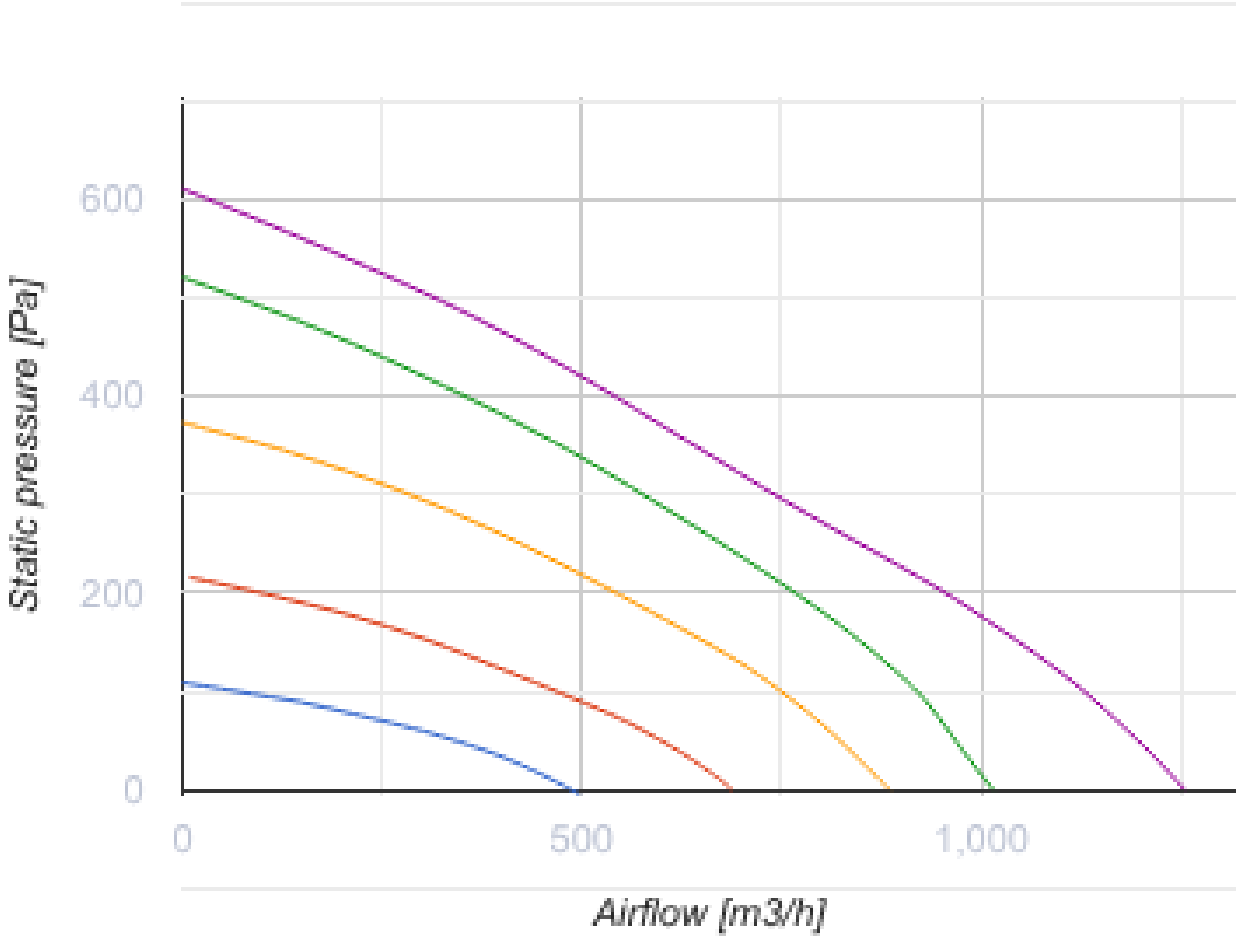
Static pressure [Pa]
600
400
200
0
0
500
1,000
Airflow [m3/h]

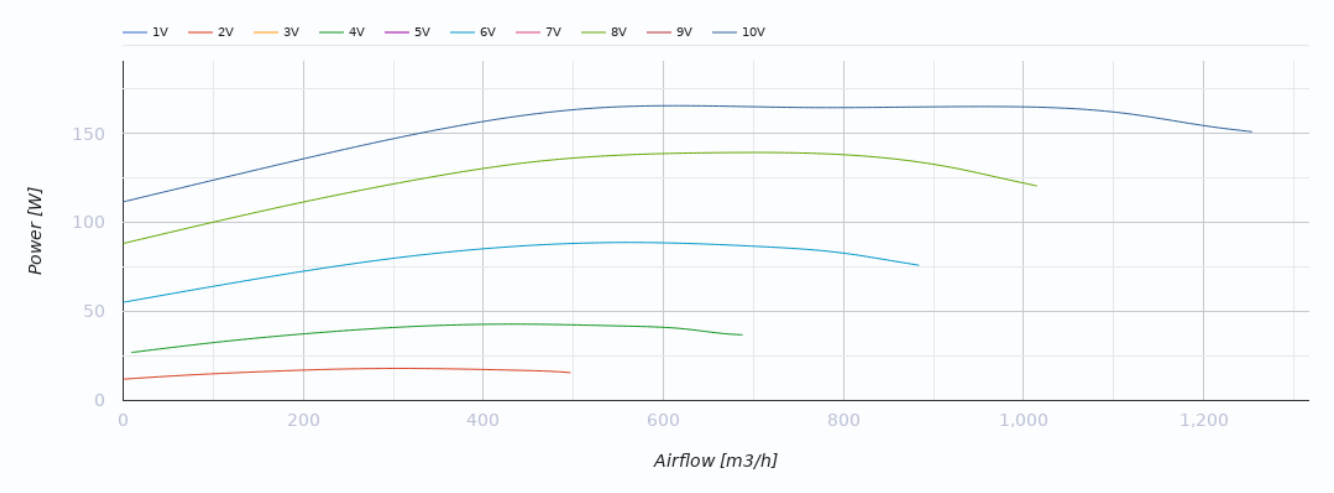

Dimensions

ØD	ØD1	B	L	L1	L2	L3
250	340	354	265	30	30	40

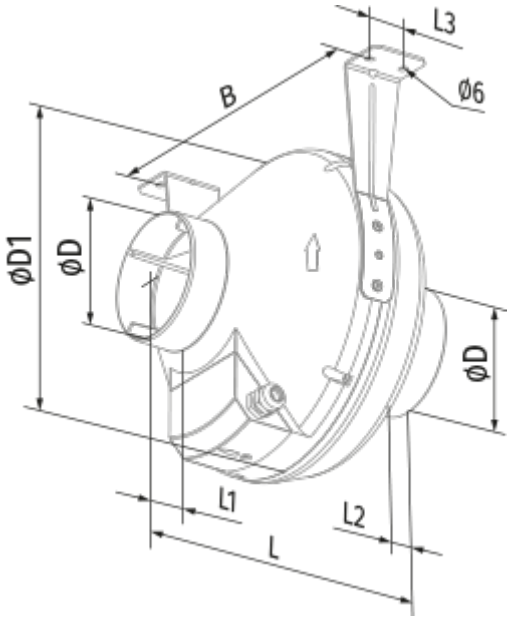

Ecodesign

Trademark	Blauberg
Model	Centro EC 250
Type of drive installed	Integrated VSD
Type of heat recovery system	None
Nominal external pressure (Pa)	754
Maximum external leakage rates (%)	2.7
Static efficiency (%)	42.2
Declared typology	NRVU UVU
Effective electric power input (kW)	0.17
Sound power level (dB(A))	66