

Centro EC 200

Centrifugal inline fans in plastic casings with EC-motors

- Sound pressure level LpA at 3 m: 47
- Impeller type: Centrifugal impeller with backward curved blades
- Casing material: Plastic
- Installation in any position

	Unit of measurement	Centro EC 200
Connected air duct size	mm	200
Phases	-	1
Minimum supply voltage	V	230
Maximum supply voltage	V	230
Power supply frequency	Hz	50
Rated power	W	84
Unit current	A	0.64
Maximum airflow	m³/h	885
Rotation speed at 50hz	-	2700
Sound pressure level LpA at 3 m	dB(A)	47
Weight	kg	3
Transported air temperature (max)	°C	60
Transported air temperature (min)	°C	-25
Ambient air temperature min	°C	1
Ambient air temperature max	°C	45
Ingress protection rating	-	IPX4
Ingress protection rating of the drive	-	IP44
Impeller material	-	Plastic

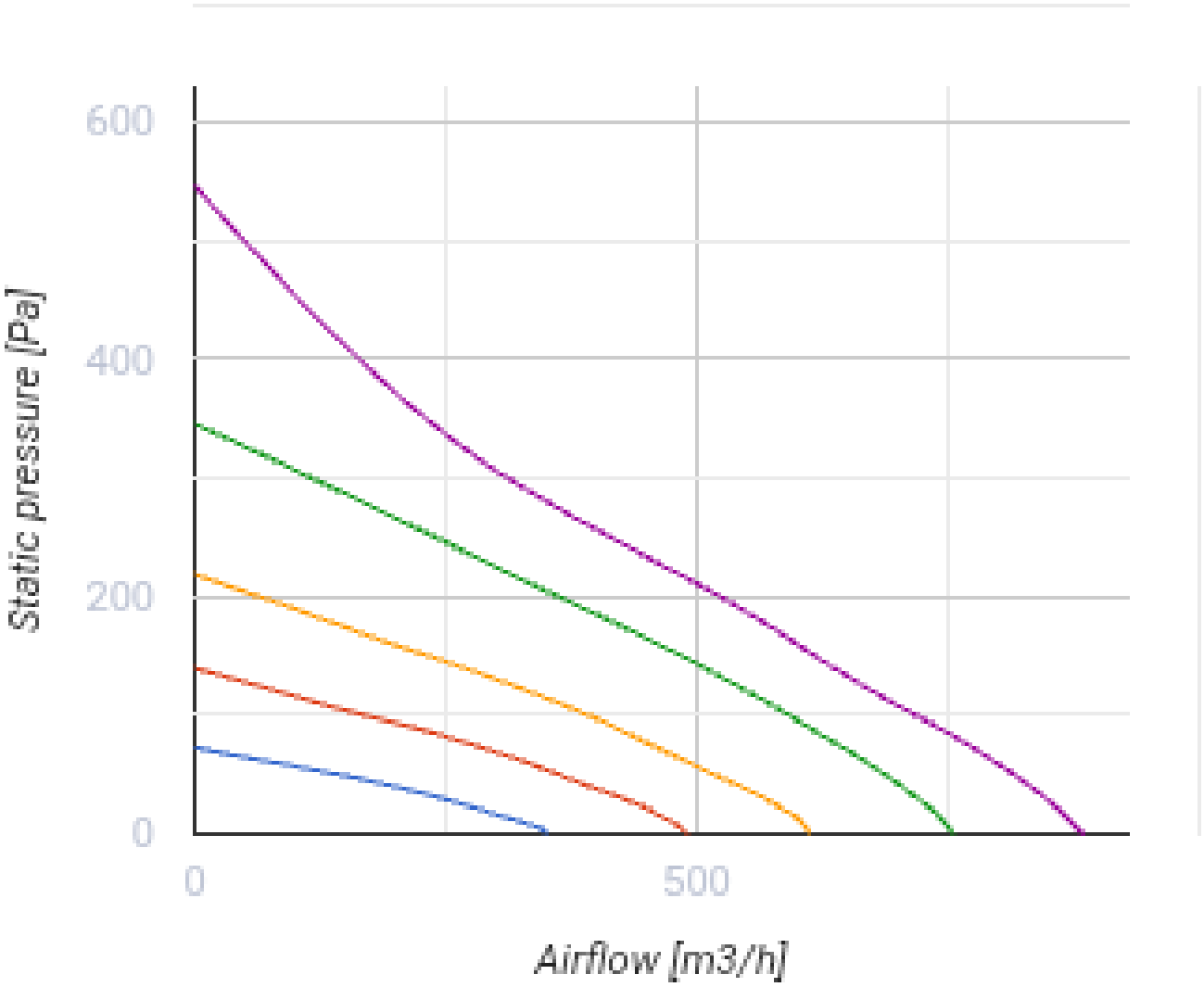

Dimensions

ØD	ØD1	B	L	L1	L2	L3
200	340	354	276	30	30	40

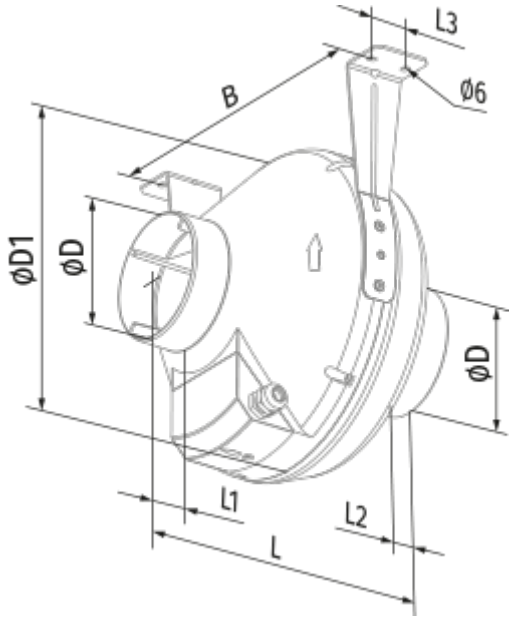
L3
B
Ø6
ØD1
ØD
ØD
L1
L2
L