

# Centro 250

Centrifugal inline fans in plastic casings

• Sound pressure level LpA at 3 m: 49
• Impeller type: Centrifugal impeller with backward curved blades
• Casing material: Polypropylene
• Installation in any position

| | Unit of measurement | Centro 250 | |
|---|---|---|---|
| Connected air duct size | mm | 250 | |
| Phases | - | 1 | |
| Minimum supply voltage | V | 230 | |
| Maximum supply voltage | V | 230 | |
| Power supply frequency | Hz | 50 | 60 |
| Rated power | W | 171 | |
| Unit current | A | 0.75 | |
| Maximum airflow | m³/h | 1100 | |
| Rotation speed at 50hz | - | 2090 | |
| Sound pressure level LpA at 3 m | dB(A) | 49 | |
| Weight | kg | 4.3 | |
| Transported air temperature (max) | °C | 50 | |
| Transported air temperature (min) | °C | -25 | |
| Ingress protection rating | - | IPX4 | |
| Ingress protection rating of the drive | - | IP44 | |
| Impeller material | - | Plastic | |

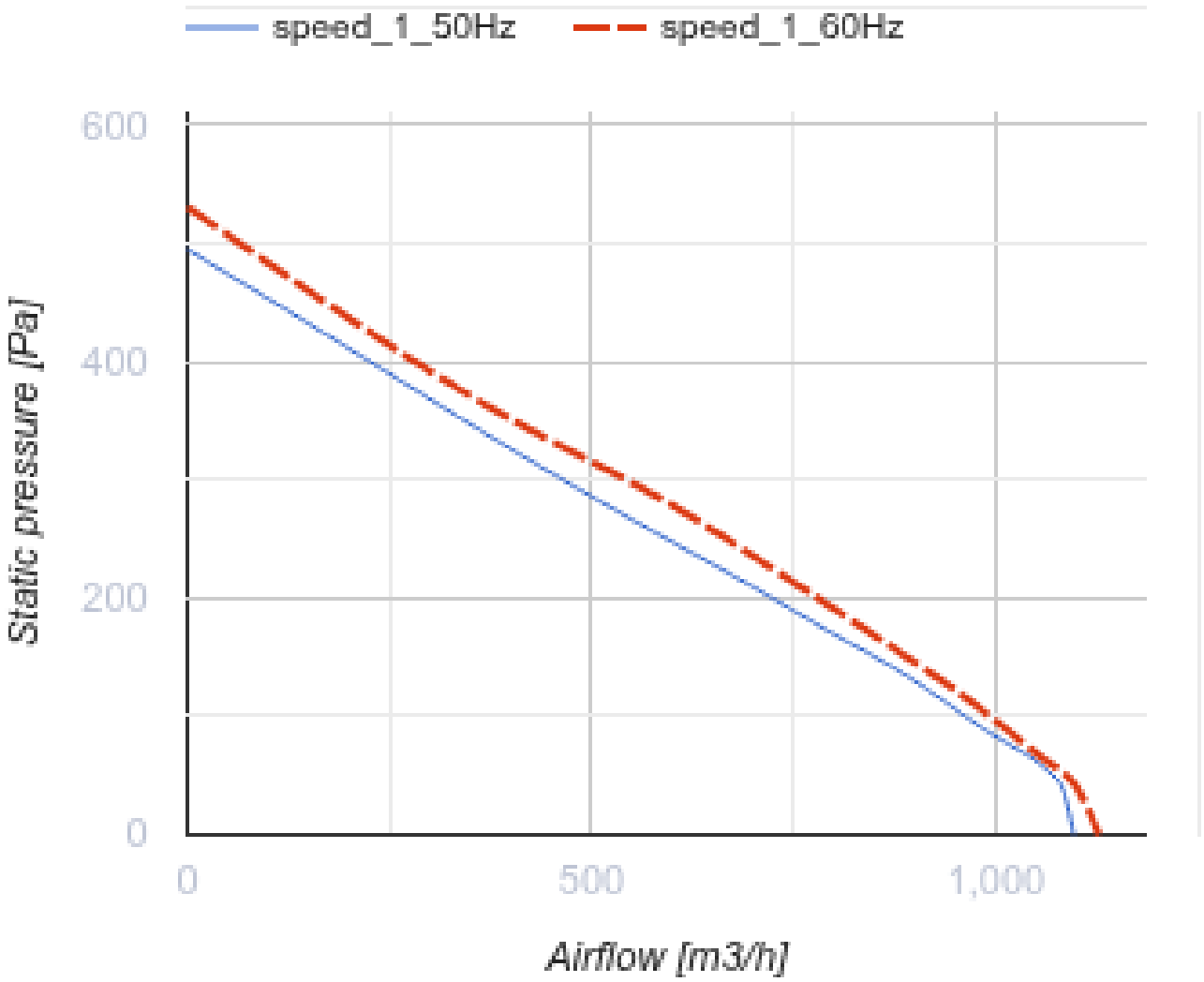
speed_1_50Hz
speed_1_60Hz
600
400
200
0
Static pressure [Pa]
0
500
1,000
Airflow [m3/h]

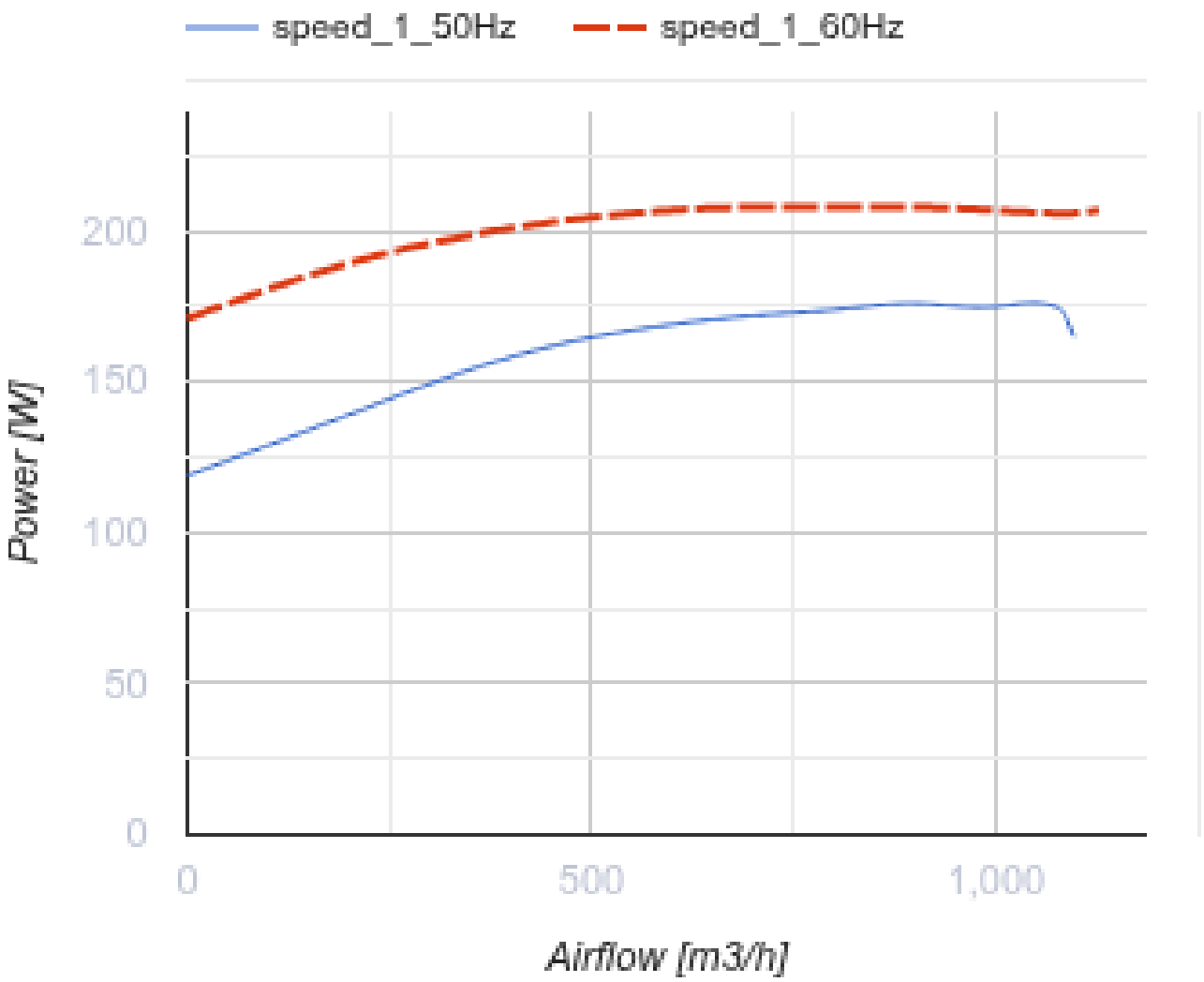


## Dimensions

| ØD | ØD1 | B | L | L1 | L2 | L3 |
|---|---|---|---|---|---|---|
| 250 | 340 | 354 | 265 | 30 | 30 | 40 |

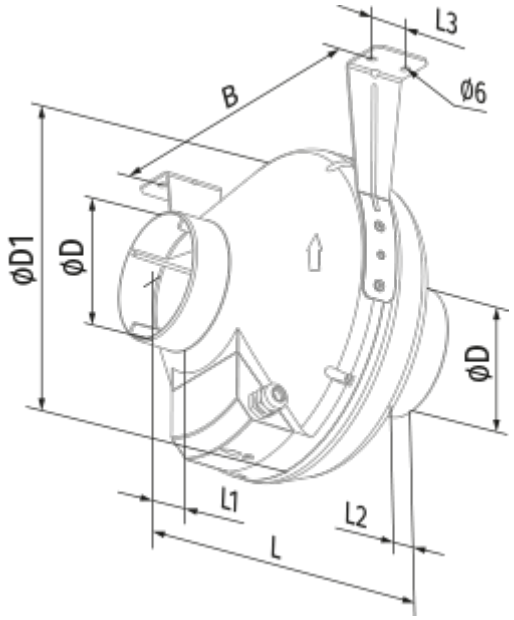
L3
B
Ø6
ØD1
ØD
ØD
L1
L2
L

## Ecodesign

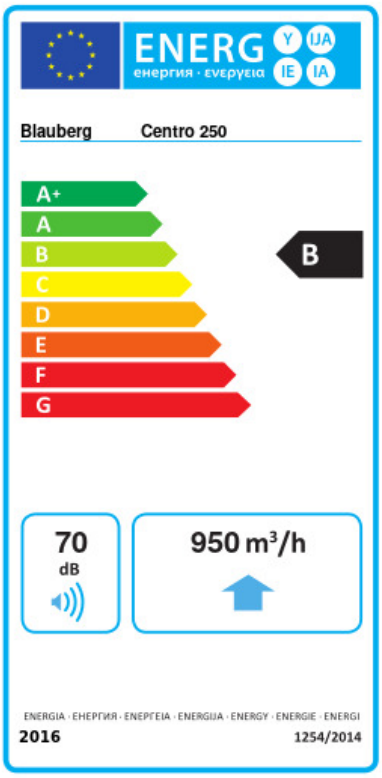


| Trademark | Blauberg | | | | | |
|---|---|---|---|---|---|---|
| Model | Centro 250 | | | | | |
| Specific energy consumption (SEC) (kWh/(m²/a)) | Cold | | Average | | Warm | |
| | -53.1 | A+ | -26 | B | -10.5 | E |
| Type of ventilation unit | Unidirectional | | | | | |
| Type of drive installed | Variable speed | | | | | |
| Type of heat recovery system | None | | | | | |
| Maximum flow rate (m³/h) | 880 | | | | | |
| Electric power input (W) | 169 | | | | | |
| Reference flow rate (m³/s) | 0.171 | | | | | |
| Reference pressure difference (Pa) | 50 | | | | | |
| Specific power input (SPI) (W/(m³/h)) | 0.17 | | | | | |
| Control typology | Local demand control | | | | | |
| Maximum external leakage rates (%) | 2.7 | | | | | |
| Declared typology | RVU UVU | | | | | |
| Sound power level (dB(A)) | 69 | | | | | |
| The annual electricity consumption (AEC) (kWh/a) | Cold | | Average | | Warm | |
| | 90 | | 90 | | 90 | |
| The annual heating saved (AHS) (kWh/a) | Cold | | Average | | Warm | |
| | 5536 | | 2830 | | 1280 | |