

Centro 200

Centrifugal inline fans in plastic casings

• Impeller type: Centrifugal impeller with backward curved blades
• Casing material: Plastic
• Installation in any position

	Unit of measurement	Centro 200
Connected air duct size	mm	200
Phases	-	1
Minimum supply voltage	V	220
Maximum supply voltage	V	240
Power supply frequency	Hz	50/60
Rated power	W	107
Unit current	A	0.47
Maximum airflow	m^3/h	780
Weight	kg	3
Transported air temperature (max)	°C	50
Transported air temperature (min)	°C	-25
Ingress protection rating	-	IPX4
Ingress protection rating of the drive	-	IP44
Impeller material	-	Plastic

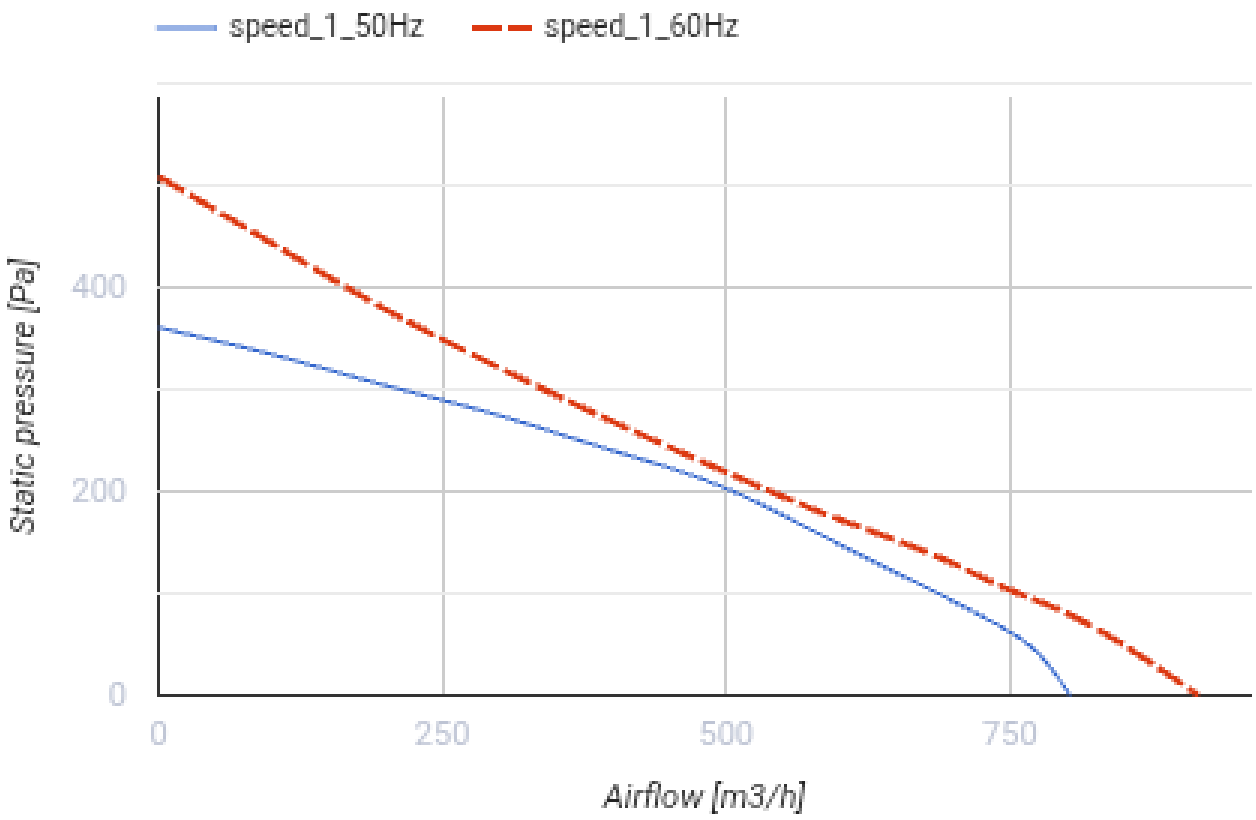
speed_1_50Hz
speed_1_60Hz
Static pressure [Pa]
400
200
0
0
250
500
750
Airflow [m3/h]

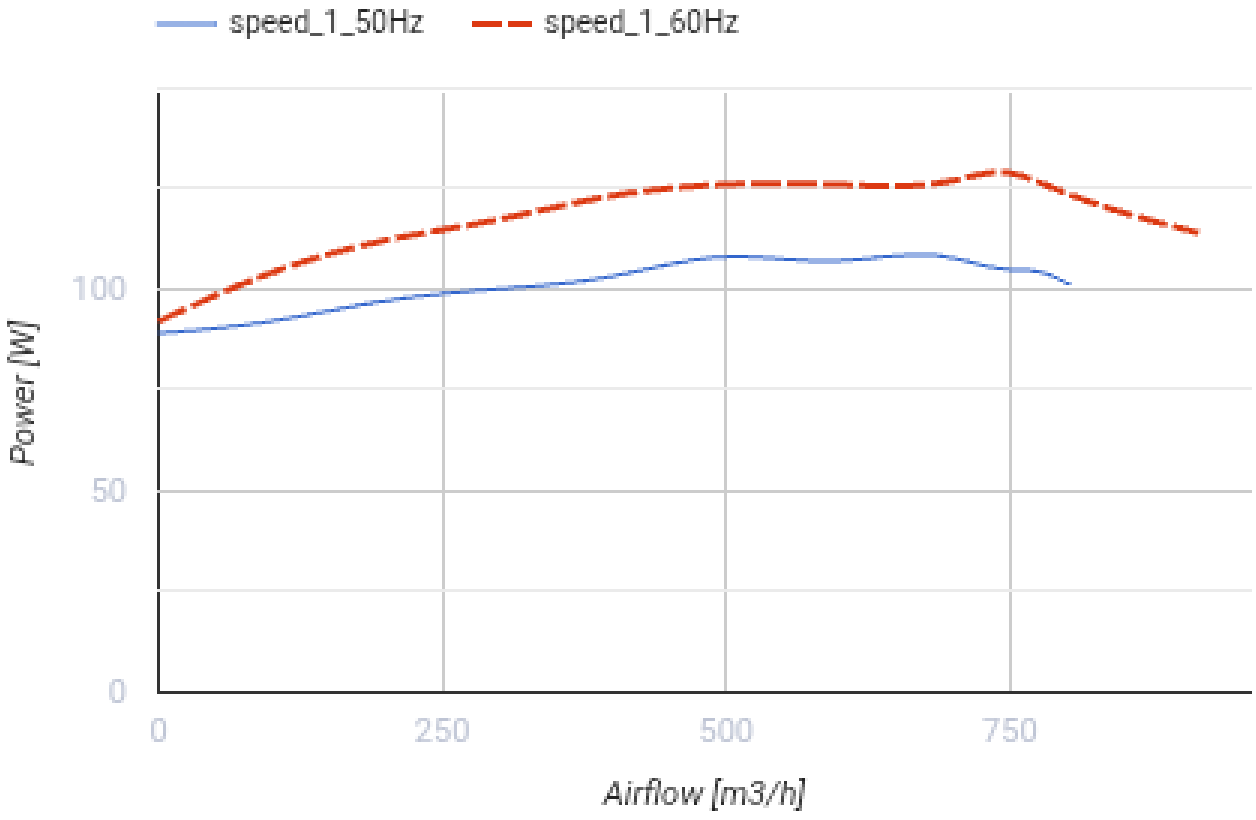
speed_1_50Hz
speed_1_60Hz
Power [W]
100
50
0
0
250
500
750
Airflow [m3/h]

Dimensions

ØD	ØD1	B	L	L1	L2	L3
200	340	354	276	30	30	40

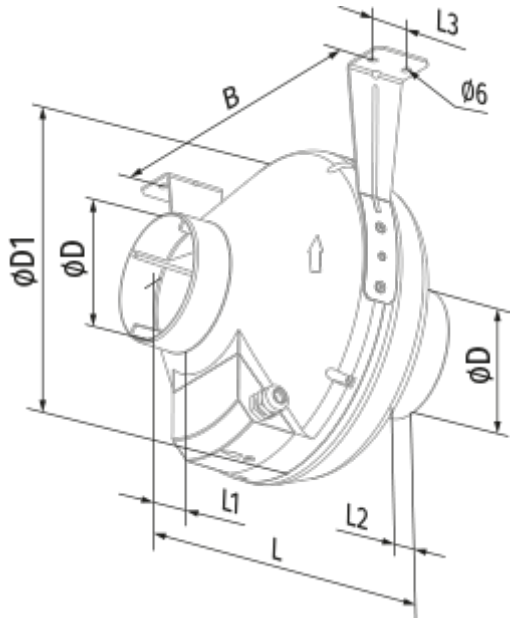

Ecodesign

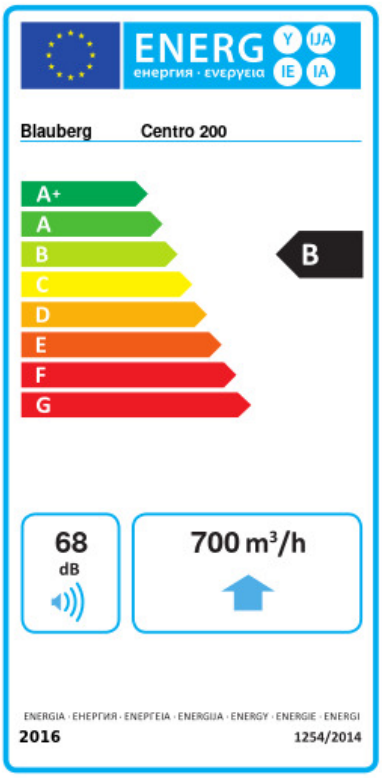

Trademark	Blauberg					
Model	Centro 200					
Specific energy consumption (SEC) (kWh/(m²/a))	Cold		Average		Warm	
	-53.9	A+	-26.8	B	-11.3	E
Type of ventilation unit	Unidirectional					
Type of drive installed	Variable speed					
Type of heat recovery system	None					
Maximum flow rate (m³/h)	700					
Electric power input (W)	107					
Reference flow rate (m³/s)	0.136					
Reference pressure difference (Pa)	50					
Specific power input (SPI) (W/(m³/h))	0.112					
Control typology	Local demand control					
Maximum external leakage rates (%)	2.7					
Declared typology	RVU UVU					
Sound power level (dB(A))	68					
The annual electricity consumption (AEC) (kWh/a)	Cold		Average		Warm	
	59		59		59	
The annual heating saved (AHS) (kWh/a)	Cold		Average		Warm	
	5536		2830		1280	